Equipment List - IMSC

T32/27

This document describes the equipment which will be operated by IMSC

Contents

Declumper AND 750 2

Declumper Infeed Chute 3

Declumper / Bag Elevator 4

Grader Elevator ..... **Error! Bookmark not defined.**

Rope Washer Hauler Post ..... **Error! Bookmark not defined.**

Seeder ANS650 ..... **Error! Bookmark not defined.**

Winch Davit ..... **Error! Bookmark not defined.**

Mussel Floats ..... **Error! Bookmark not defined.**

Sub Sea Floats ..... **Error! Bookmark not defined.**

Farm Ropes, Anchor Warps and Mainlines ..... **Error! Bookmark not defined.**

Spat Catching Rope ..... **Error! Bookmark not defined.**

Maintenance ..... **Error! Bookmark not defined.**

Anchor Rope and Mainlines ..... **Error! Bookmark not defined.**

Lashing Ropes for Droppers ..... **Error! Bookmark not defined.**

Navigational Buoys ..... **Error! Bookmark not defined.**

SL-B1 250 ..... **Error! Bookmark not defined.**

Marine Lantern ..... **Error! Bookmark not defined.**

SL70 ..... **Error! Bookmark not defined.**

Anchors ..... **Error! Bookmark not defined.**

Equipment Booklet ..... **Error! Bookmark not defined.**

END ..... **Error! Bookmark not defined.**

Contents

Declumper AND 750 2

Declumper Infeed Chute 3

Declumper / Bag Elevator 4

Grader Elevator ..... Error! Bookmark not defined.

Rope Washer Hauler Post ..... Error! Bookmark not defined.

Seeder ANS650 ..... Error! Bookmark not defined.

Winch Davit ..... Error! Bookmark not defined.

Mussel Floats ..... Error! Bookmark not defined.

Sub Sea Floats ..... Error! Bookmark not defined.

Farm Ropes, Anchor Warps and Mainlines ..... Error! Bookmark not defined.

Spat Catching Rope ..... Error! Bookmark not defined.

Maintenance ..... Error! Bookmark not defined.

Anchor Rope and Mainlines ..... Error! Bookmark not defined.

Lashing Ropes for Droppers ..... Error! Bookmark not defined.

Navigational Buoys ..... Error! Bookmark not defined.

SL-B1 250 ..... Error! Bookmark not defined.

Marine Lantern ..... Error! Bookmark not defined.

SL70 ..... Error! Bookmark not defined.

Anchors ..... Error! Bookmark not defined.

Equipment Booklet ..... Error! Bookmark not defined.

END ..... Error! Bookmark not defined.

The purpose of this document is to outline the equipment used by Irish Mussel Seed Company in relation to application T32/27. Each piece of equipment will be maintained in accordance with usage and manufacturers guidelines.

Declumper AND 750

Includes:

-10 to12 ton/hr capacity

-Ø750mm De-clumping drum

-950mm long Washing screen

-1x bolt-on perforated adjustable screen (2mm to 15mm)

-3x drive motors (De-clumping drum, Screen & Hauling wheel)

-Independent screen drive

-Stainless Steel Hauling wheel with rope stripper

-25mm thick rubber rope strippers

-Three cleaning access doors with safety isolator

-Hydraulic plumbing & controls with SS fittings

-Manual leg tilting system (standard) Hydraulic option as per above

-3x water control valves

-Mounting plates to weld to deck for legs

-Hydraulic requirements: 110 litres/min @ 60 bar

Declumper Infeed Chute

Includes:

-Stainless steel construction
-Hinging mounting brackets
-Lifting handles

Declumper Infeed Chute

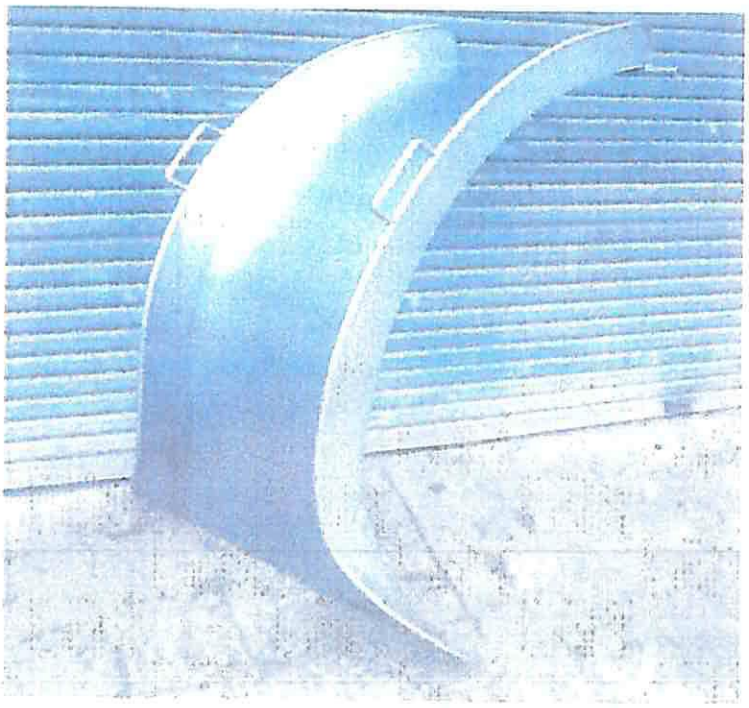

Includes:

-Stainless steel construction
-Hinging mounting brackets
-Lifting handles

Declumper / Bag Elevator

Includes:

-Stainless steel construction
-500mm wide belt x 3300mm long
-Bag filling height range from 550mm to 1700mm
-Plastic modular belt with 75mm high upstands
-Hydraulic drive motor & hydraulic controls
-Lifting ram with hydraulic controls (access both sides of conveyor)
-Pivot mounting plate (for manual pivot only)
-Hydraulic price based on pressure compensated system
-Hydraulic requirements: 8 litres/min @ 1500psi

Grader Elevator

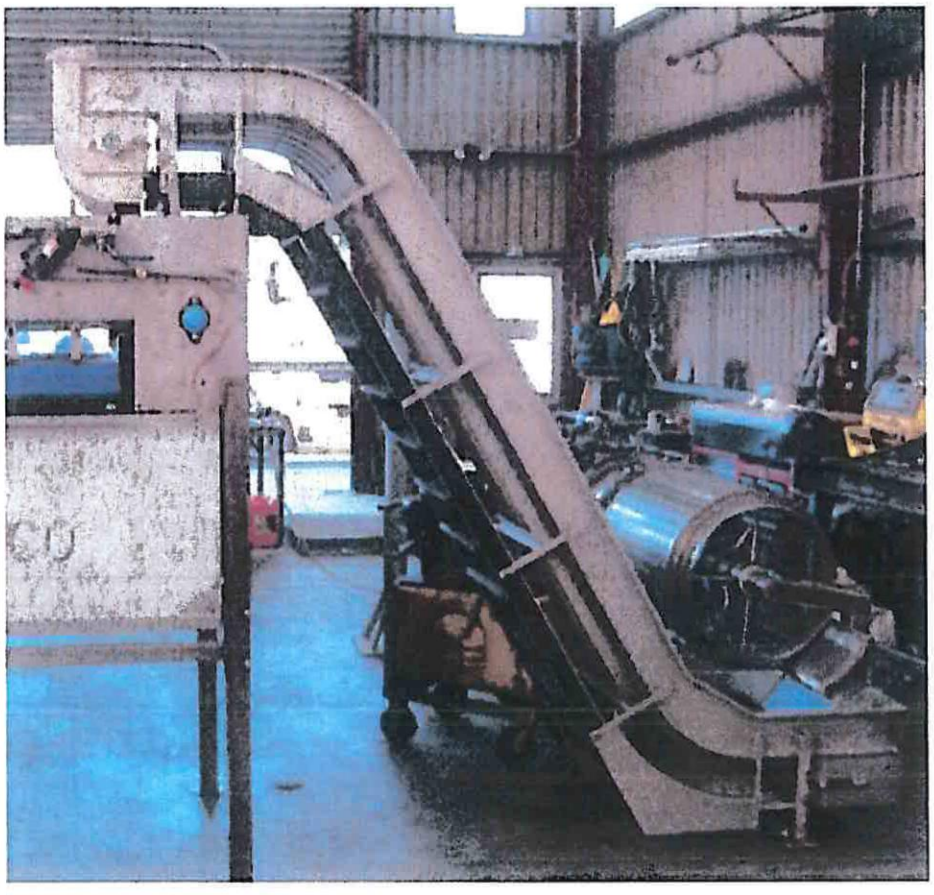

Includes:

-Stainless steel construction

-400mm wide belt

-PVC heavy duty belt with bolt on Uhmwpe flights

-Hydraulic drive motor & hydraulic controls

-Mussel spreader chute on to grader

Rope Washer Hauler Post

Includes:

-Galvanised steel construction

-2x Idler wheels -SS Hauler wheels

-Rope peeler knife

-30 cube hydraulic motor

-Hydraulic plumbing (flow control & ball valve)

-Adjustable bag frame -Alloy / mild steel weld on doubling plate

Rope Washer Hauler Post

Includes:

-Galvanised steel construction

-2x Idler wheels -SS Hauler wheels

-Rope peeler knife

-30 cube hydraulic motor

-Hydraulic plumbing (flow control & ball valve)

-Adjustable bag frame -Alloy / mild steel weld on doubling plate

Seeder ANS650

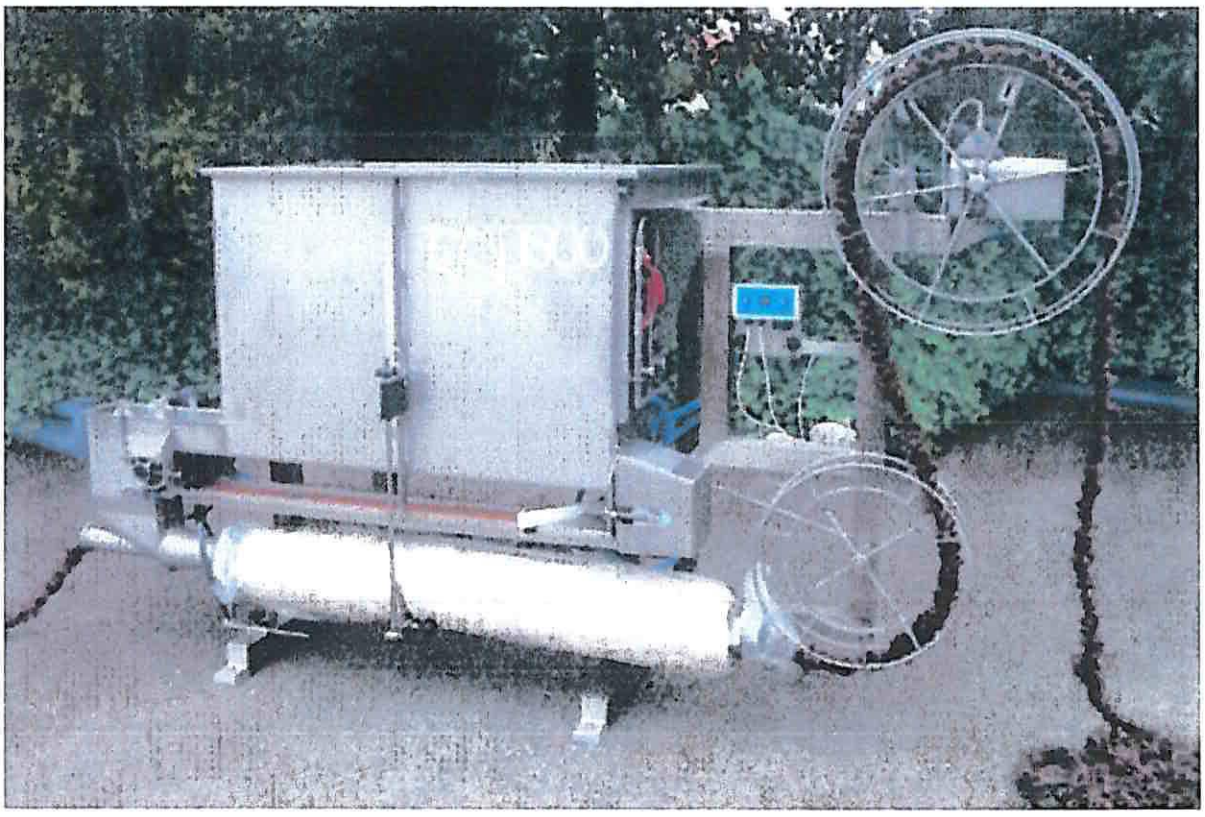

Includes:

-Stainless steel construction
-Hopper volume = 0.65m³
-Mechanical counter for dropper length
-Hydraulic plumbing & controls
-Marinised hydraulic motors
-To suit 75, 90 & 110mm PVC pipes
-Hinging Drive wheel bracket (for storage & access)
-Fully adjustable PVC pipe support bracket
-Quick release system for PVC pipes
-Hydraulic plumbing is priced for Pressure compensated pump
-Hydraulic plumbing for Fixed pump

Winch Davit

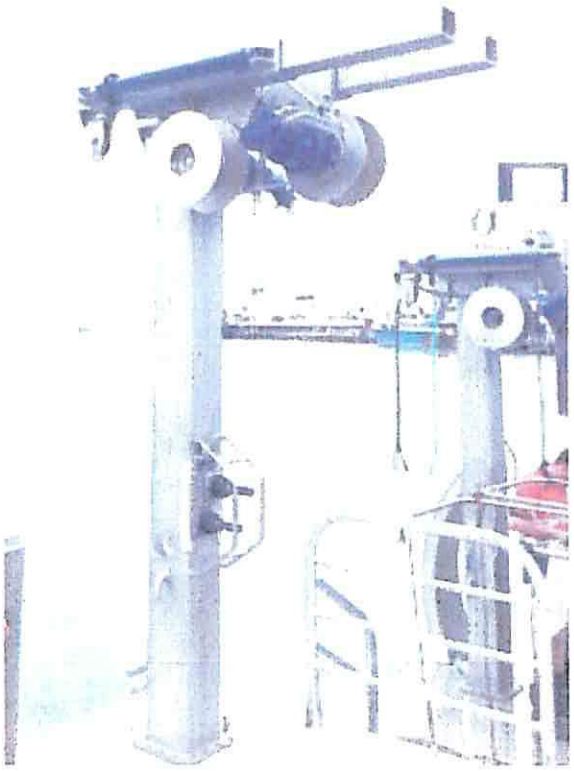

Includes:
-Brevini braked gearbox with 200cc hydraulic motor
-Certified design 1500 kg SWL per arm -Galvanised steel construction
-250x250mm SHS posts -Twin winch drums
-Twin 800mm telescopic extension (hydraulic)
-Stainless steel deck mounting flange with steel doubling plate
-Rope tie off hooks
-Hydraulic hose work inside davit post.
-Hydraulic hoses to the rams and motors (SS tube work shown in photo)
-Hydraulic control valve

Winch Davit

Includes:

-Brevini braked gearbox with 200cc hydraulic motor
-Certified design 1500 kg SWL per arm -Galvanised steel construction
-250x250mm SHS posts -Twin winch drums
-Twin 800mm telescopic extension (hydraulic)
-Stainless steel deck mounting flange with steel doubling plate
-Rope tie off hooks
-Hydraulic hose work inside davit post.
-Hydraulic hoses to the rams and motors (SS tube work shown in photo)
-Hydraulic control valve

Mussel Floats

Description:

Aquaculture 'Mussel' Float (200 Series)

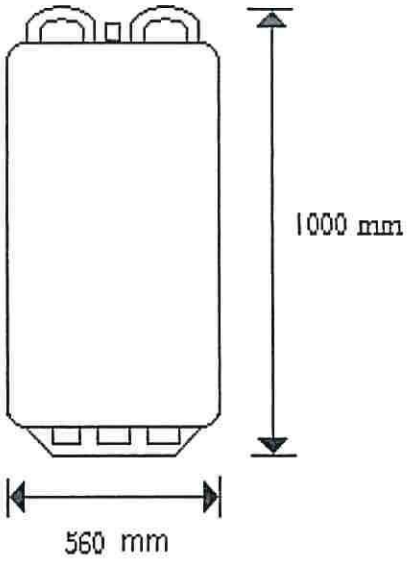

Method of Fabrication:

Extrusion Blow moulded.

Materials:

Body	High Density Polyethylene
Closure	Brass valve with Stainless Steel screw stud
Gasket	EPDM

Colour: Grey ref. 17736

Dimensions in mm:

Overall Height	1000 mm +/- 20 mm
Float Diameter	560 mm +/- 20 mm

Tare Weight: 10 kg

Nominal Capacity:

220 Litres

Pressure

0.2 Bar is introduced by Gem Plastics Limited prior to dispatch.
It is recommended that this pressure be maintained during the working life of the float.

Sub Sea Floats

Lines are set up with a combination of surface floats and smaller subsea heavy-duty PPE floats. These floats are either hard tied, or short dropper tied to the anchor warp for the purpose of providing tension should it be required. PPE floats are heavy walled, injection moulded with various working depths from 40mtrs to 100mtrs depending on the size. Eyes or lugs in these injection moulded floats are solid plastic, offering very strong rope supports and extremely long life. These can be seen on the single long-line layout drawing.

Sub Sea Floats

Lines are set up with a combination of surface floats and smaller subsea heavy-duty PPE floats. These floats are either hard tied, or short dropper tied to the anchor warp for the purpose of providing tension should it be required. PPE floats are heavy walled, injection moulded with various working depths from 40mtrs to 100mtrs depending on the size. Eyes or lugs in these injection moulded floats are solid plastic, offering very strong rope supports and extremely long life. These can be seen on the single long-line layout drawing.

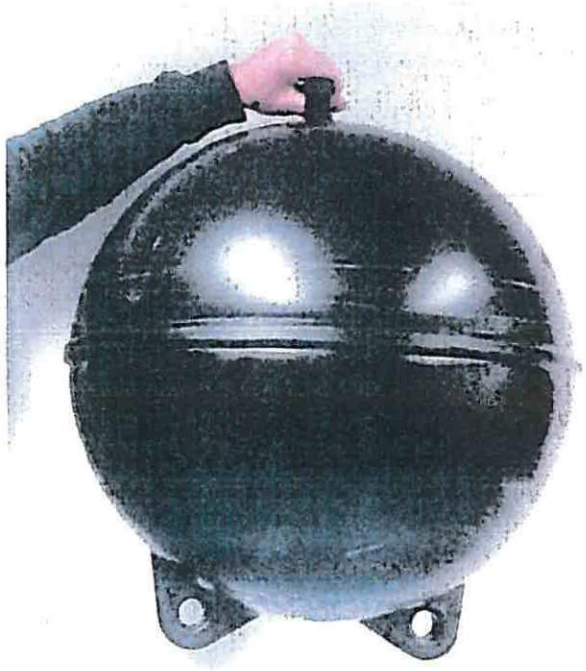

Farm Ropes, Anchor Warps and Mainlines

Spat Catching Rope

- Spat Catching Rope extra heavy duty, Loop or cut.6L x 2000mtrs
- Cut Loop Spat Extra Heavy Duty. 5L, or 6L.
- Cut Loop Spat Catching,
- 18mm core x 2000mtr Carbon Black, 55-65mm de-waxed cut trims,
- PVC coated wires as required in core.

Dewaxed highly fibrillated fibres, formed in a net like structure, simulating natural algae environments.

Maintenance

After harvest the Spat catching ropes and harvest ropes are washed and brushed. The ropes will be inspected, and where necessary old lashing and or fouling is removed. The ropes are transferred from one bulk bag to another allowing the operator to visually inspect the ropes and to make sure it has not acquired any torque from the harvesting process. Brushing has the added advantage of re vitalizing the cut or loop trims to ensure the best presentation to the mussels when re deployed.

Anchor Rope and Mainlines

- UV treated. HI Fib De wax
- Durashield 32mm, Hard lay, Carbon black, 32mtrs x175mtrs
- 32mm x 220mtr Medium or Hard Lay Carbon Black or Std Colours,
- B/load 16800kg, weight 106.05g

Lashing Ropes for Droppers

Danlash, 5mm x 500mtr Soft Carbon Black with Red fleck B/load 465kg, weight 5.50kg

Anchor Rope and Mainlines

- UV treated. HI Fib De wax
- Durashield 32mm, Hard lay, Carbon black, 32mtrs x175mtrs
- 32mm x 220mtr Medium or Hard Lay Carbon Black or Std Colours,
- B/load 16800kg, weight 106.05g

Lashing Ropes for Droppers

Danlash, 5mm x 500mtr Soft Carbon Black with Red fleck B/load 465kg, weight 5.50kg

Navigational Buoys

SL-B1 250

Sealite have a range of mooring chains & accessories - ask your representative today how we can supply your complete mooring solution

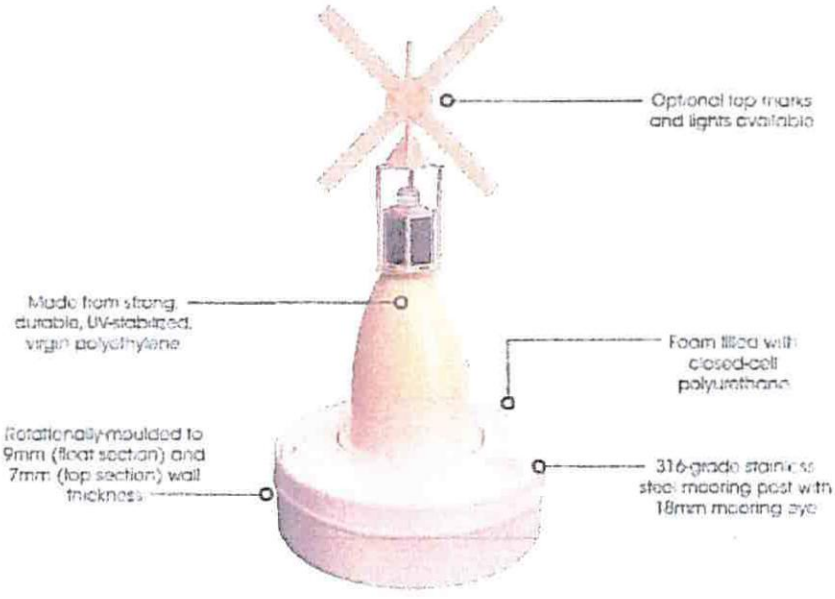

The Sealite Advantage

- **Single piece float**
- **Complete unit - ready for immediate installation**
- **High visibility red, green, white or yellow as per IALA recommendations**
- **316-grade stainless steel eye bolt for strong mooring chain attachment point**
- **Excellent buoyancy & stability**

The SL-B1250, 1250mm dia. Navigation Buoy, has proven its superior performance in many parts of Australia and around the world for long-range river and sea navigation.

The base is moulded in one-piece, strong, coloured, durable polyethylene - filled with closed-cell polyurethane and UV-stabilized for resistance to sunlight

The strong, lightweight polyethylene buoy top is moulded in standard IALA high visibility colours and shapes to suit a range of installation requirements.

For superior night visibility, the SL-B1250 navigation buoy may be fitted with a range of Sealite solar LED marine lanterns up to 5NM+

Brass inserts provide a secure mounting for top, tower and signs. A 316-grade stainless steel eyebolt passes through the base providing a strong mooring chain attachment point

In addition, all hardware and fittings are 316-grade stainless steel.

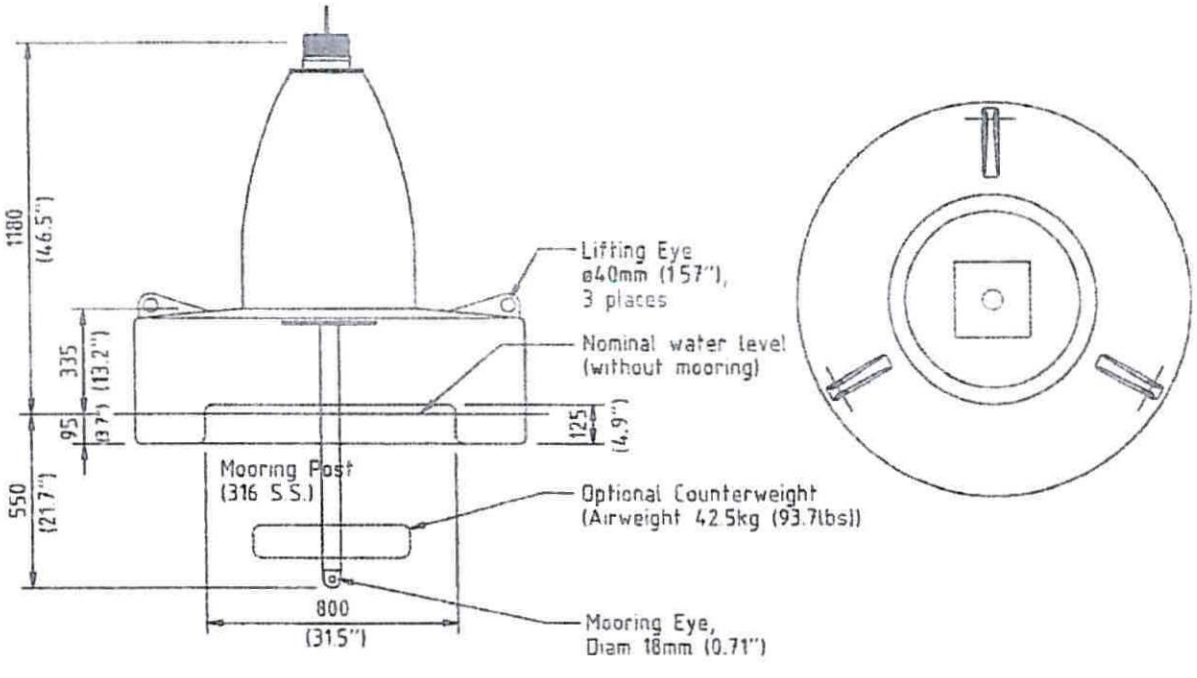

SPECIFICATIONS * * SL-B1250

General Characteristics

Available Colours	Red, Green, White, Yellow as per IALA Recommendations
Focal Plane Height (mm/inches)	1180 / 46 1/2
Total Float Volume (ltrs/US gallon)	610 / 161
Nominal Freeboard (mm/inches)	335 / 13 1/8
Nominal Draft (mm/inches)	550 / 21 2/3
Reserve Buoyancy (kgs/lbs)	155 / 342
Maximum Mooring Load (kgs/lbs)	155 / 342
Draft, Maximum (mm/inches)	675 / 26 2/3
Freeboard, Minimum (mm/inches)	210 / 8 1/3
Submergence (kg/cm, lb/inches)	12.5 / 70
Visual Area (m^2/ft^2)	0.8 / 8.6

Physical Characteristics

Material	Rotationally-moulded UV-stabilized virgin polyethylene, 316-grade stainless steel mooring pole
Wall Thickness (mm/inches)	9 / 3/8 (float section), 7 / 1/4 (top section)
Ballast (kg/lbs)	30 / 66 external counter-weight (optional)
Filling	Closed-cell polyurethane foam (float section)
Height (mm/inches)	1180 / 46 1/2
Width (mm/inches)	1250 / 49 1/4
Mass (kg/lbs)	70 / 154
Product Life Expectancy	Up to 12 years

Certifications

Quality Assurance	ISO9001:2008

Intellectual Property

Trademarks	SEALITE® is a registered trademark of Sealite Pty Ltd

Warranty *

1 year

Lantern Options

Sealite SL-15, SL-60, SL-70 or SL-C310 lantern

Options Available

- Mould-in graphics
- Sealite IALA recommended top marks
- External ballast
- Radar reflector

SPECIFICATIONS** SL-BT250

General Characteristics

Available Colours	Red, Green, White, Yellow as per IALA Recommendations
Focal Plane Height (mm/inches)	1180 / 46 1/4
Total Float Volume (ltrs/US gallon)	610 / 161
Nominal Freeboard (mm/inches)	335 / 13 1/4
Nominal Draft (mm/inches)	550 / 21 1/8
Reserve Buoyancy (kgs/lbs)	155 / 342
Maximum Mooring Load (kgs/lbs)	155 / 342
Draft, Maximum (mm/inches)	675 / 26 1/4
Freeboard, Minimum (mm/inches)	210 / 8 1/4
Submergence (kg/cm, lb/inches)	12.5 / 70
Visual Area (m^2/ft^2)	0.8 / 8.6

Physical Characteristics

Material	Rotationally-moulded UV stabilized virgin polyethylene, 316 grade stainless steel mooring pole
Wall Thickness (mm/inches)	9 / 3/8 (float section), 7 / 1/4 (top section)
Ballast (kg/lbs)	30 / 66 external counter weight (optional)
Filling	Closed-cell polyurethane foam (float section)
Height (mm/inches)	1180 / 46 1/4
Width (mm/inches)	1250 / 49 1/4
Mass (kg/lbs)	70 / 154
Product Life Expectancy	Up to 12 years

Certifications

Quality Assurance	ISO9001:2008

Intellectual Property

Trademarks	SEALITE® is a registered trademark of Sealite Pty Ltd

Warranty *

1 year

Lantern Options

Sealite SL-15, SL-60, SL-70 or SL-C310 lantern

Options Available

- Mould in graphics
- Sealite IALA recommended top marks
- External ballast
- Radar reflector

Marine Lantern

SL70

Available with RF Synchronisation or Radio Control

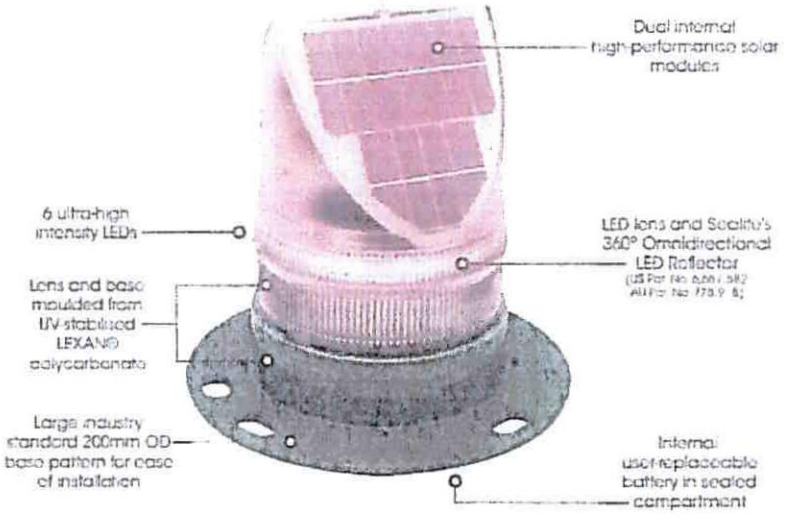

The Sealite SL70 is exceptional in its unique ability to be able to 'track the sun' and operate reliably in low sunlight conditions. The SL70 has been proven to operate as a 2-3+ nautical mile compact buoy lantern in various low sunlight environments such as Britain, Canada and Europe.

Made from tough, durable polycarbonate and using the latest high intensity LEDs, the SL70 lantern boasts dual high-performance solar modules incorporated into Sealite's world-first Solar Collection Lens. These solar modules are angled to obtain maximum sunlight capture, allowing the unit to operate reliably in a range of low sunlight environments

The SL70 can be installed in minutes and requires no operator intervention. The flash characters are easily adjusted onsite by the user, and the lantern has a permanent ON/OFF switch for easy storage.

Sealite's SL70 solar marine light has been awarded the prestigious Australian DesignMark® at the Australian Design Awards, a testament of Sealite's commitment to the ongoing development of state-of-the-art products

Optional RF Synchronisation

The SL70 is available with optional short-range RF Synchronisation. Two (2) or more lights can be synchronised to flash in unison via an internal RF module. When lanterns flash in synchronisation they can be clearly distinguished from other navaids and confusing background lighting - ideal for rivers, marina entrances, channel marking and aquaculture.

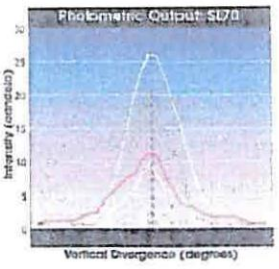

Optional Radio Control System

Radio control may be fitted to the SL70 model enabling users to remotely modify the setup of their lantern via handheld radio controller

Optional 12 LED Light Configuration

In high sunlight regions the SL70 may be fitted with 12 LEDs and appropriate intensity settings to provide a range of >3 nautical miles (colour dependant)

Optional Larger Battery Pack

In regions where additional autonomy is required, the SL70 can be supplied with a larger 16Ah battery pack - this greatly extends the operational autonomy

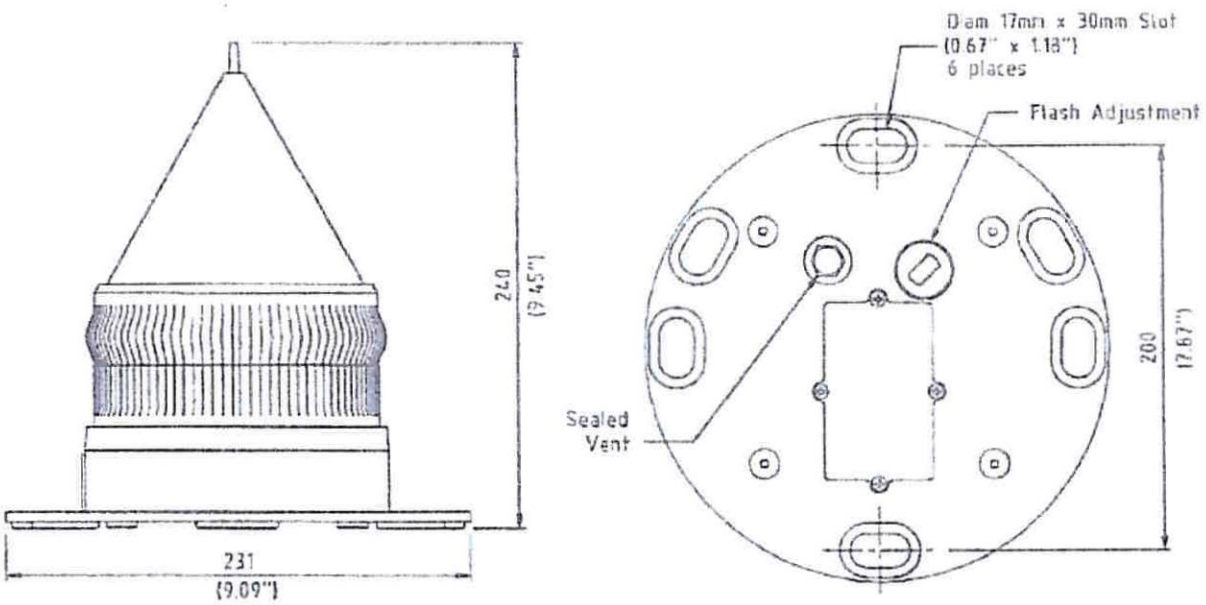

Light Characteristics

Light Source	6 ultra-high intensity LEDs
Available Colours	Red, Green, White, Yellow, Blue
Maximum Available Intensity (cd)†	Red - 11.4 Green - 20.0 White - 26.0 Yellow - 10.0
Visible Range (nm)	2-3+
Horizontal Output (degrees)	360
Vertical Divergence (degrees)	9
Reflector Type	Omnidirectional 360° LED Reflector (US Pat. No. 6,667,582. AU Pat. No. 778,918)
Available Flash Characteristics	Up to 256 IALA recommended (user adjustable)
Intensity Adjustments	Adjustable in 25% increments
LED Life Expectancy (hours)	>100,000

Electrical Characteristics

Current Draw (mA)	Refer to Sealite Power Calculator
Circuit Protection	Integrated
Nominal Voltage (v)	3.6
Autonomy (days)	>30 (14 hour darkness, 12.5% duty cycle)
Temperature Range	-40 to 80°C

Solar Characteristics

Solar Module Type	Multicrystalline
Output (watts)	2.5 (2 x 1.25watt)
Solar Module Efficiency (%)	14
Charging Regulation	Microprocessor controlled

Power Supply

Battery Type	High grade NiMH - Environmentally friendly
Battery Capacity (Ah)	8
Nominal Voltage (v)	3.6
Battery Service Life	Average 5 years

Physical Characteristics

Body Material	LEXAN® Polycarbonate - UV-stabilised
Lens Material	LEXAN® Polycarbonate - UV-stabilised
Lens Diameter (mm/inches)	150 / 5⅞
Lens Design	External optics with interior flute design
Mounting	200mm OD base pattern
Height (mm/inches)	240 / 9½
Width (mm/inches)	231 / 7⅞
Mass (kg/lbs)	1.4 / 3⅛ (SL70/16Ah 1.6 / 3½)
Product Life Expectancy	Up to 12 years

Certifications

CE	EN61000-6-3:1997, EN61000-6-1:1997
Quality Assurance	ISO9001:2008
Waterproof	IP68

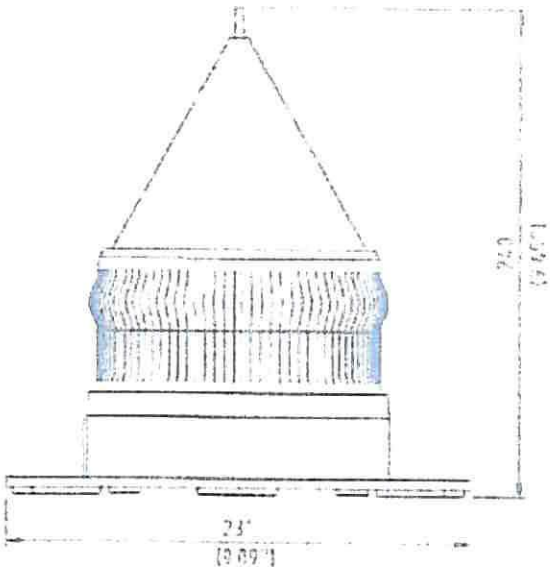

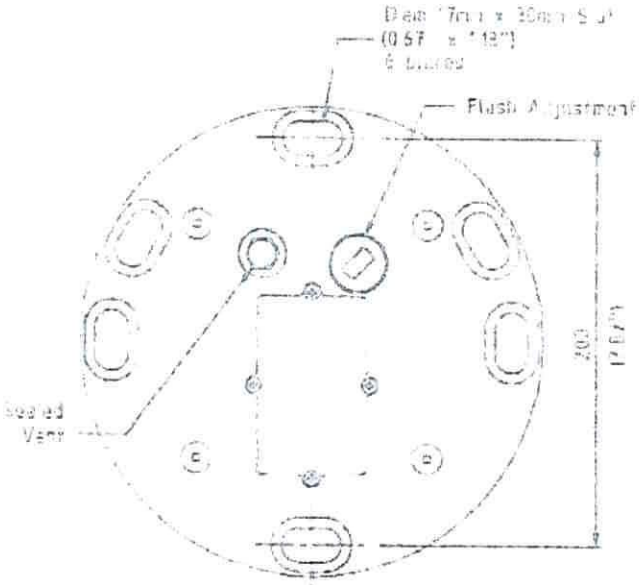

Light Characteristics

Light Source	6 ultra-high intensity LEDs
Available Colours	Red, Green, White, Yellow, Blue
Maximum Available Intensity (cd)†	Red - 11.4 Green - 20.0 White - 25.0 Yellow - 10.0
Visible Range (nm)	2-3+
Horizontal Output (degrees)	360
Vertical Divergence (degrees)	9
Reflector Type	Unidirectional 360° LED Reflector (US Pat. No. 6,667,682 AU Pat. No. 773,918)
Available Flash Characteristics	Up to 256 MLA recommended (user adjustable)
Intensity Adjustments	Adjustable in 25% increments
LED Life Expectancy (Hours)	[illegible]

Electrical Characteristics

Current Draw (mA)	[illegible]
Circuit Protection	Integrated
Nominal Voltage (v)	3.6
Autonomy (days)	[illegible]
Temperature Range	[illegible]

Solar Characteristics

Solar Module Type	Multicrystalline
Output (watts)	2.5 (2 x 1.25watt)
Solar Module Efficiency (%)	14
Charging Regulation	Microprocessor controlled

Power Supply

Battery Type	High grade NiMH (environmentally friendly)
Battery Capacity (Ah)	6
Nominal Voltage	[illegible]
Battery Service Life	Average [illegible]

Physical Characteristics

Body Material	LEXAN® Polycarbonate - UV stabilised
Lens Material	LEXAN® Polycarbonate - UV stabilised
Lens Diameter (mm/inches)	150 / 5⅞
Lens Design	External optics with interior flute design
Mounting	200mm OD base pattern
Height (mm/inches)	240 / 9½
Width (mm/inches)	231 / 7⅞
Mass (kg/lbs)	1.4 / 3⅛ (SL70/16Ah 1.6 / 3⅞)
Product Life Expectancy	Up to 12 years

Certifications

CE	EN61000-6-3:1997 EN61000-6-1:1997
Quality Assurance	ISO9001:2008
Waterproof	IP68

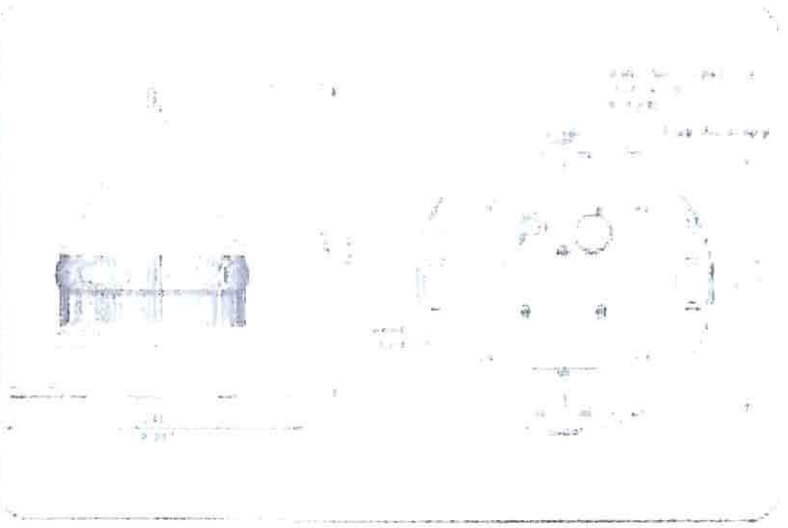

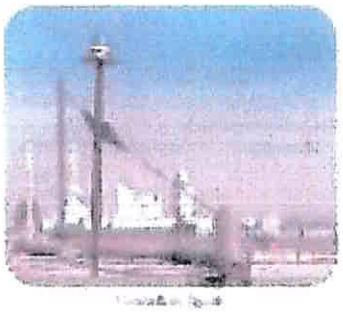

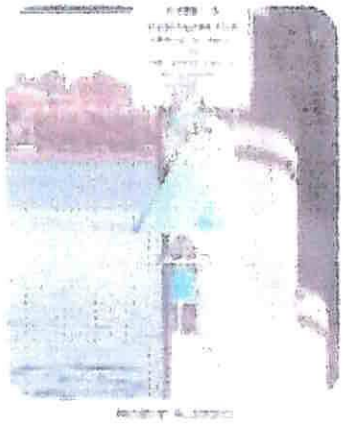

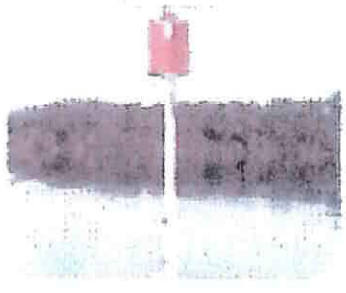

SPECIFICATIONS

Light Characteristics

Electrical Characteristics

Solar Characteristics

Power Supply

Physical Characteristics

Certifications

Intellectual Property

Warranty

Options Available